Selection Form Cart

Requested Date

Please check the corresponding item in ☐

Select gearmotor series ※If you are unable to make a selection, please leave it blank.

☐ Induction Gearmotor(MID series / MINI series) ☐ IPM Gearmotor(Speed Control Type)

☐ Battery-powered Type Gearmotor(DC12V/24V/48V) ☐ Requested Model 〔 〕

※If you already know the mode number, please enter that in 〔 〕.

Output shaft type selection ※If you are unable to make a selection, please leave it blank.

☐ Parallel Shaft (G3, G type) ☐ Right Angle Shaft (H2, H type) ☐ Hollow Shaft (FS, F2, F3 type) ☐ Solid Shaft (FF, F2, F3 type)

※Sample Image

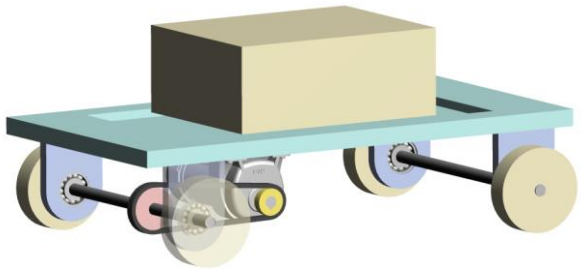

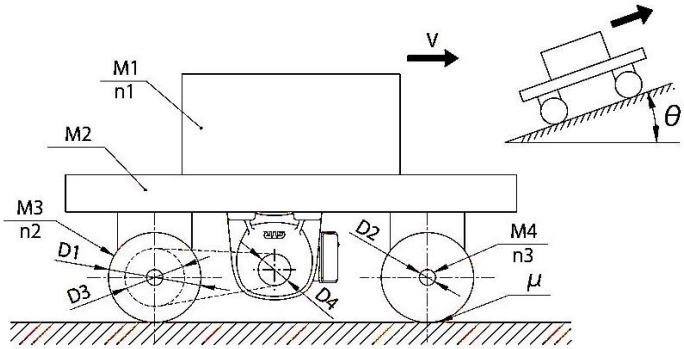

Operating Conditior ※Leave the field blank if you are not sure

- Moving speed V = ☐ mm/s
- Weight of the Work M1 = ☐ kg/pcs
- Number of Works n1 = ☐ pcs
- Weight of the Cart M2 = ☐ kg
  (total weight excluding the work, wheels, and axle)
- Weight of the wheel M3 = ☐ kg/pcs
- Number of wheels n2 = ☐ pcs
- Weight of the axle M4 = ☐ kg/pcs
- Number of axles n3 = ☐ pcs
- Outer diameter of the wheel D1 = ☐ mm
- Outer diameter of the axle D2 = ☐ mm
- P.C.D. of Driven Side Sprocket D3 = ☐ mm
  (Timing Pulley, Gear) ※Not required for direct coupling
- P.C.D. of Drive Side Sprocket D4 = ☐ mm
  (Timing Pulley, Gear) ※Not required for direct coupling
- Running inclination angle θ = ☐ °
- Rolling Coefficient of Friction of the Wheel μ = ☐
- Repeated Stopping Accuracy ※Enter only if necessary.
  ± ☐ mm(travel distance equivalent)
- Power ☐ 3-phase ☐ 1-phase ☐ Battery(DC)
  ☐ V ☐ Hz
- Start/Stop Frequency
  ☐ Times / ☐ Minute ☐ Hour ☐ Day
- Brake ☐ with ☐ without
- Inverter ☐ with ☐ without
  ※Check this box only for induction gearmotors.
- Other operating conditions such as cycle time

Customer Information

CS center Technical Support Desk
E-mail : tech-cs@nissei-gtr.co.jp

Company Name

Department

Job Title

Name

Address

Phone Number

FAX Number

E-mail

Purpose of Selection ☐ New Facility ☐ Replacement ☐ Change model ☐ Others〔 〕

Type of Industry ☐ Conveyor ☐ Food Processing Machine ☐ Machine for Agriculture or Fisheries
☐ Tooling Machine ☐ Packaging Machine ☐ Printing・Paper Converting Machine
☐ Special Machine ☐ Construction Machine ☐ Electrical and Electric Equipment
☐ Medical Equipment ☐ Design Office ☐ Trading Company ☐ Others〔 〕

Notice Please note that we may send you separate message after registering your information we have obtained through customer inquiries.
Please let us know anytime if you want us to delete your information from our system.

NISSEI CORPORATION